CZT

High efficiency air to water heat pumps with E.V.I. compressors

RADWAN®
OSUSZANIE / WENTYLACJA / POMPY CIEPŁA
infolinia: +48 691 262 691

CE
R407C
-15°C
+63°C
+43°C
E.V.I.
HP

The CZT series of high efficiency heat pumps has been specifically designed for use with radiant floor heating systems or those applications where it is necessary to have maximum efficiency when heating.
The units have been designed for internal installation in plant rooms and are fitted with centrifugal fans suitable for connection to ductwork.
They have been optimized on heating mode, are able to produce water up to 63°C and can operate down to -15°C ambient temperature.
CZT units are available in 2 or 4 pipe (SW6) versions.
Both versions can produce domestic hot water, in the standard CZT through the activation of an external 3-way-valve and in the SW6 version by means of a separate heat exchanger and hydraulic circuit for the domestic hot water.
All models are supplied as standard with a reversing valve for defrost and cold water production in summer.

OTHER VERSIONS

- **CZT 2 pipes reversible standard.**
- **CZT/SW6 4 pipe unit** able to produce hot and cold water at the same time on two independent hydraulic circuits.

ACCESSORIES

- **BRCA:** Condensate discharge drip tray with antifreeze heater.
- **DSSE**: Electronic soft starter.
- **INSE**: Serial interface card RS 485.
- **KAVG**: Rubber anti-vibration mountings.
- **RAEV**: Evaporator antifreeze heater.
- **RAES**: Antifreeze kit.
- **LS00**: Low noise version.
- **MAML**: Refrigerant circuit pressure gauges.
- **PCRL**: Remote control panel.
- **VTEE**: Electronic expansion valve.

CZT

CZT - CZT/SW6 Models		06	08	10M	10T	14T
Heating capacity (EN14511) (1)	kW	6,6	8,7	9,6	9,6	13,9
Total input power (EN14511)(1)	kW	2,0	2,5	2,8	2,8	3,9
COP (EN14511) (1)	W/W	3,3	3,5	3,4	3,4	3,6
Heating capacity (EN14511) (2)	kW	4,6	5,9	6,8	6,8	10,0
Total input power (EN14511)(2)	kW	1,9	2,3	2,6	2,5	3,7
COP (EN14511) (2)	W/W	2,4	2,6	2,6	2,7	2,7
Cooling capacity (EN14511) (3)	kW	6,9	9,9	11,3	11,3	15,5
Total input power (EN14511)(3)	kW	2,5	3,0	3,4	3,4	4,7
EER (EN14511) (3)	W/W	2,8	3,3	3,3	3,3	3,3
Cooling capacity (EN14511) (4)	kW	4,8	7,3	8,5	8,7	11,7
Total input power (EN14511)(4)	kW	2,3	2,7	3,1	3,0	4,3
EER (EN14511) (4)	W/W	2,0	2,7	2,7	2,9	2,7
Power supply	V/Ph/Hz	230/1/50	230/1/50	230/1/50	400/3+N/50	400/3+N/50
Max input current	A	18,3	22,3	23,8	9,8	19,0
Peak current	A	61,8	79,8	100,8	43,8	73,0
Fans / Available static pressure	n° / Pa	1/50	1/50	1/50	1/50	1/50
Compressors	n° / scroll	1 HP	1 HP	1 E.V.I.	1 E.V.I.	1 E.V.I.
Sound power level (5)	dB (A)	71	71	72	72	73
Sound pressure level (6)	dB (A)	43	43	44	44	45
Water pump (optional)	kW	0,13	0,13	0,2	0,2	0,3
Water tank (optional)	l	40	40	40	40	60

CZT - CZT/SW6 Models		21	28	42	52
Heating capacity (EN14511) (1)	kW	19,6	30,6	42,7	53,1
Total input power (EN14511)(1)	kW	5,2	8,1	11,5	14,3
COP (EN14511) (1)	W/W	3,8	3,7	3,7	3,7
Heating capacity (EN14511) (2)	kW	14,3	20,7	29,1	36,5
Total input power (EN14511)(2)	kW	4,8	7,7	10,7	13,5
COP (EN14511) (2)	W/W	3,0	2,7	2,7	2,7
Cooling capacity (EN14511) (3)	kW	21,4	37,1	51,4	57,6
Total input power (EN14511)(3)	kW	6,3	9,5	13,8	16,4
EER (EN14511) (3)	W/W	3,4	3,8	3,7	3,5
Cooling capacity (EN14511) (4)	kW	16,4	27,9	39,2	42,6
Total input power (EN14511)(4)	kW	5,8	8,9	12,8	14,8
EER (EN14511) (4)	W/W	2,8	3,0	3,0	2,9
Power supply	V/Ph/Hz	400/3+N/50	400/3+N/50	400/3+N/50	400/3/50
Max input current	A	16,7	24,0	33,6	39,2
Peak current	A	103,7	78,0	116,5	119,9
Fans / Available static pressure	n° / Pa	1/50	1/50	2/50	2/50
Compressors	n° / scroll	1 E.V.I.	2 E.V.I.	2 E.V.I.	2 E.V.I.
Sound power level (5)	dB (A)	77	82	86	86
Sound pressure level (6)	dB (A)	49	54	85	58
Water pump (optional)	kW	0,45	0,55	1,0	1,3
Water tank (optional)	l	60	180	300	300

Performances refer to the following conditions:

(1)Heating: Ambient temperature 7°C DB, 6°C WB, water temperature 30/35°C.

(2)Heating: Ambient temperature -7°C DB, -8°C WB, water temperature 30/35°C.

(3)Cooling: ambient temperature 35°C, water temperature 23/18°C.

(4)Cooling: ambient temperature 35°C, water temperature 12/7°C.

(5)Sound power level in accordance with ISO 9614 (LS version).

(6)Sound pressure level at 10 mt from the unit in free field conditions direction factor Q=2, calculated in accordance with ISO 9614 (LS version).

CZT

FRAME

All CZT units are made from hot-galvanised sheet steel, painted with polyurethane powder enamel and stoved at 180°C to provide maximum protection against corrosion. The frame is self-supporting with removable panels. All screws and rivets used are made from stainless steel. The standard colour of the units is RAL 9018.

REFRIGERANT CIRCUIT

The refrigerant utilised is R407C. The refrigerant circuit is assembled using internationally recognised brand name components with all brazing and welding being performer in accordance with ISO 97/23. The refrigerant circuit includes: sight glass, filter drier, two thermal expansion valves (one for cooling mode, one for heating mode) with external equalizer, 4 way reversing valve, check valves, liquid receiver, Schrader valves for maintenance and control, pressure safety device (for compliance with PED regulations). From model size 10 upwards the circuit also includes an AISI316 stainless steel heat exchanger that is used as an economizer plus an additional expansion valve for refrigerant vapour injection.

COMPRESSORS

CZT heat pumps from model size 10 upwards utilise scroll compressors that are equipped with E.V.I. technology, a versatile method of improving system capacity and efficiency. EVI stands for "Economised Vapour Injection." The technology involves injecting refrigerant vapour into the middle of the compression process, a procedure that significantly boosts capacity and efficiency. Each scroll compressor used in these units is similar to a two-stage compressor with built-in inter-stage cooling. The process begins when a portion of the condenser liquid is extracted and expanded through an expansion valve. The low temperature liquid/gas mixture produced is injected into a heat exchanger that operates as a sub cooler. Any liquid is evaporated and the vapour produced is superheated. The superheated vapour is then injected into an intermediate port in the scroll compressor.
This cold vapour reduces the temperature of the compressed gas thus enabling the compressor to raise the pressure to levels (and temperatures) beyond that possible with a single stage scroll. The additional sub cooling of the main volume of liquid refrigerant increases the evaporator capacity. This compressor technology generates a larger pressure ratio between condensing and evaporating pressures, with significant performance improvement. From size 28 upwards, the compressors are connected in tandem. The compressors are all supplied with a crankcase heater and thermal overload protection by a klixon embedded in the motor winding. They are mounted in a separate enclosure in order to be separated from the air stream thus enabling them to be maintained even if the unit is operating. Access to this enclosure is via the front panel of the unit. The crankcase heater is always powered when the compressor is in stand-by.

SOURCE HEAT EXCHANGER

The source heat exchanger is made from 3/8" copper pipes and 0,1mm thick aluminium fins with the tubes being mechanically expanded into the aluminium fins in order to maximise heat transfer. Furthermore, the design guarantees a low air side pressure drop thus enabling the use of low rotation speed (and hence low noise) fans. The exchangers can be protected by a metallic filter that is available as an accessory.

USER HEAT EXCHANGER

The user heat exchanger is a braze welded, plate type heat exchanger, manufactured from AISI 316 stainless steel. Utilisation of this type of exchanger results in a massive reduction of the refrigerant charge of the unit compared to a traditional shell-in-tube type. A further advantage is a reduction in the overall dimensions of the unit.
The exchangers are factory insulated with flexible close cell material and can be fitted with an antifreeze heater (accessory). Each exchanger is fitted with a temperature sensor on the discharge water side for antifreeze protection.

FANS

The fans are made of galvanized steel, centrifugal type, double inlet with forward curved blades. They are connected to the motors via belts and pulleys, are statically and dynamically balanced and are supplied complete with a safety fan guard complying with the requirements of EN 294. They are fixed to the unit frame via rubber anti-vibration mountings. As standard, all units are fitted with a pressure operated fan speed controller.The electric motors are 4 pole type rotating at approximately 1500 rpm. The motors are fitted with integrated thermal overload protection and have a moisture protection rating of IP 54.

MICROPROCESSORS

All CZT units are supplied as standard with microprocessor controls. The microprocessor controls the following functions: control of the water temperature, antifreeze protection, compressor timing, compressor automatic starting sequence (For multiple compressors), alarm reset. The control panel is supplied with display showing all operational icons. The microprocessor is set for automatic defrost (when operating in severe ambient conditions) and for summer/ winter change over.
The control also manages the anti-legionella program, the integration with other heating sources (electric heaters, boilers, solar panels etc), the operation of a three port modulating valve (for diverting to DHW or heating) and both the heating circuit pump and the domestic hot water circuit pump.
If required (available as an option), the microprocessor can be configured in order for it to connect to a site BMS system thus enabling remote control and management. The Hidros technical department can discuss and evaluate, in conjunction with the customer, solutions using MODBUS protocols.

ELECTRIC ENCLOSURE

The enclosure is manufactured in order to comply with the requirements of the electromagnetic compatibility standards CEE 73/23 and 89/336. Access to the enclosure is achieved by removing the front panel of the unit. The following components are supplied as standard on all units: main switch, thermal overloads (protection of pumps and fans), compressor fuses, control circuit automatic breakers, compressor contactors, fan contactors and pump contactors.
The terminal board has volt free contacts for remote ON-OFF, Summer/Winter change over and general alarm. For all three phase units, a sequence relay that disables the power supply in the event that the phase sequence is incorrect (scroll compressors can be damaged if they rotate in the wrong direction), is fitted as standard.

CONTROL AND PROTECTION DEVICES

All units are supplied with the following controls and protections: user water return temperature sensor, antifreeze protection temperature sensor installed on users water output, domestic hot water supply and

return temperature sensors (only versions SW6), high pressure manual reset, low pressure automatic reset, compressor thermal protection, air fan, thermal protection, pressure transducer (used to optimize the defrost cycle and to adjust the fan speed depending on ambient conditions), flow switch.
All units are also fitted with a temperature probe sensor with "Energy Saving" function, supplied in a separate plastic box, which can be used to stop the pump use during periods of stand-by, when the water temperature reaches the set point. Doing this the power consumption of the unit is strongly reduced.
The probe sensor must be positioned in the hydraulic compensator present at the screening technique. The domestic hot water circuit (only versions SW6) is already equipped with this probe, but it must be installed in the user circuit.

OTHER VERSIONS

CZT/SW6 UNIT WITH INDEPENDENT DOMESTIC HOT WATER PRODUCTION

This version is fitted with an additional heat exchanger, used as condenser, to produce domestic hot water irrespective of the operation mode of the unit. The activation of the additional heat exchanger is performed automatically by the microprocessor control when the domestic hot water temperature, measured by the sensor, is lower than the required set point. If, during the summer months, the unit is operating on cooling, this version can produce hot and cold water simultaneously. This version is equipped with return and supply domestic hot water sensors and an advanced control panel with specific software for management of the system priorities.

CZT / A1 HIGH EFFICIENCY HEAT PUMP WITH INTEGRATED HYDRAULIC KIT

CZT heat pumps have available, as an option, a built in hydraulic kit that includes: Water tank in different sizes (depending on the size of the unit) factory insulated with flexible close cell material and prepared for the installation of an antifreeze kit (option) and a water pump, centrifugal type, suitable for chilled water operation. The pump is directly controlled by the microprocessor. The water tank is installed on the hot water outlet water side in order to minimize fluctuations in the water temperature due to the compressors cycling at part load conditions. Also provided in the hydraulic circuit are an expansion vessel, pressure relief valve and system isolating valves with fittings.

CZT/LS LOW NOISE VERSION

This version has acoustic insulation applied to the unit (both the compressor and its enclosure) in the form of compressor jackets and insulating material made with high density media coated with a heavy bitumen layer.

OPERATION LIMITS

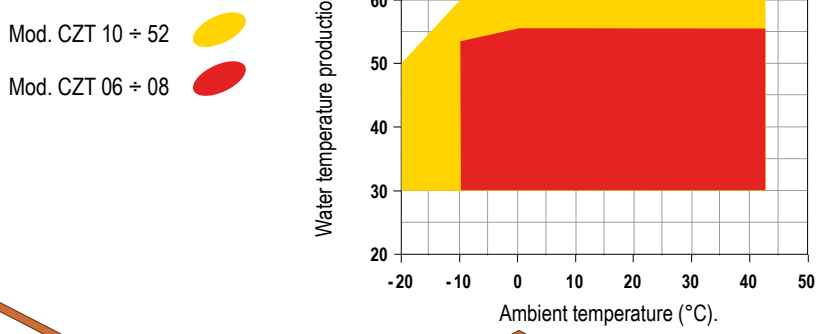

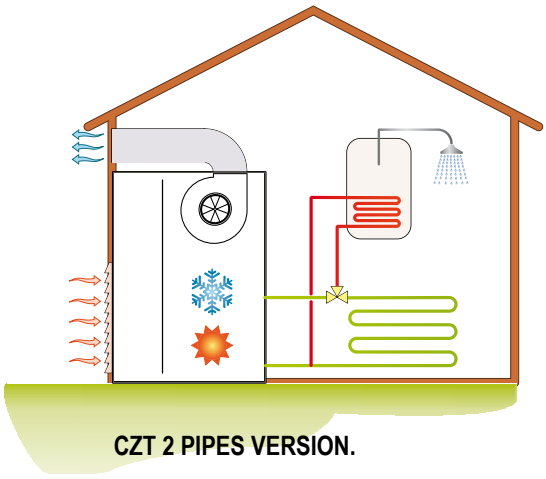

CZT 2 PIPES VERSION.

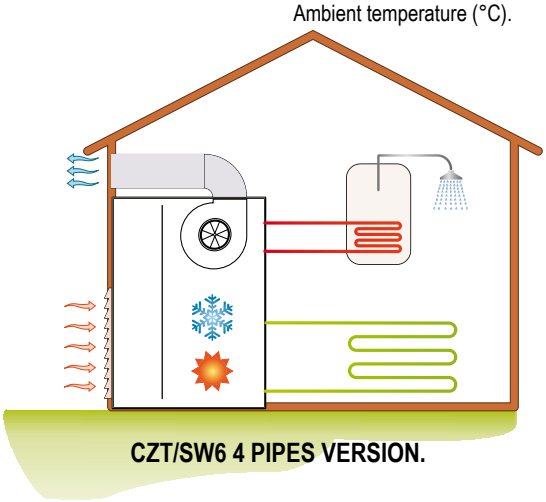

CZT/SW6 4 PIPES VERSION.

CZT

CZT - CZT/SW6 Versions	Code	06	08	10M	10T	14M	14T
Main switch		●	●	●	●	●	●
Compressor automatic switch		●	●	●	●	●	●
Flow switch		●	●	●	●	●	●
Pressure control by transducer and modulating damper	DCCI	●	●	●	●	●	●
Fresh air temperature probe for set-point compensation	SOND	●	●	●	●	●	●
Specific software for operation priorities		●	●	●	●	●	●
Remote ON/OFF digital input		●	●	●	●	●	●
Summer/Winter digital input		●	●	●	●	●	●
Condensate discharge drip tray with antifreeze heater	BRCA	●	●	●	●	●	●
Evaporator antifreeze heater (basic version only)	RAEV	○	○	○	○	○	○
A1 Hydraulic kit (tank and pump)	A1ZZ	○	○	○	○	○	○
A2 Hydraulic kit (tank and 2 pumps)	A2ZZ	–	–	–	–	–	–
A1NT Hydraulic kit (pump only)	A1NT	○	○	○	○	○	○
A2NT Hydraulic kit (2 pumps only)	A2NT	–	–	–	–	–	–
LS Low noise version	LS00	○	○	○	○	○	○
Rubber anti-vibration mountings	KAVG	○	○	○	○	○	○
Antifreeze kit (only for A versions)	RAES	○	○	○	○	○	○
Refrigerant circuit pressure gauges	MAML	○	○	○	○	○	○
Electronic Soft starter	DSSE	○	○	○	○	●	○
Remote control panel	PCRL	○	○	○	○	○	○
Serial interface card RS485 with MODBUS protocol	INSE	○	○	○	○	○	○
Electronic thermostatic valve	VTEE	○	○	○	○	○	○

● Standard, ○ Optional, – Not available.

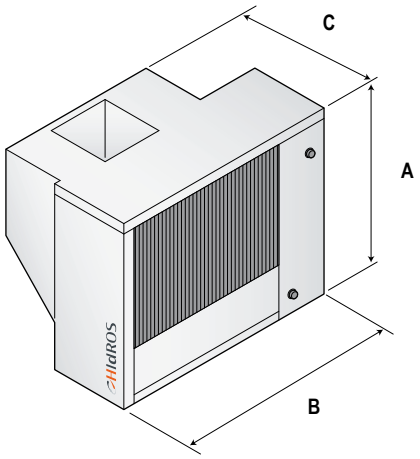

CZT 06 ÷ 21

Mod.	A (mm)	B (mm)	C (mm)	Kg
06/06A	989	1160	655	102/155
08/08A	989	1160	655	110/170
10/10A	989	1160	655	128/187
14/14A	1324	1245	694	135/217
21/21A	1424	1510	780	142/222

CZT

CZT - CZT/SW6 Versions	Code	21	28	42	52
Main switch		●	●	●	●
Compressor automatic switch		●	●	●	●
Flow switch		●	●	●	●
Pressure control by transducer and modulating damper	DCCI	●	●	●	●
Fresh air temperature probe for set-point compensation	SOND	●	●	●	●
Specific software for operation priorities		●	●	●	●
Remote ON/OFF digital input		●	●	●	●
Summer/Winter digital input		●	●	●	●
Condensate discharge drip tray with antifreeze heater	BRCA	●	●	●	●
Evaporator antifreeze heater (basic version only)	RAEV	○	○	○	○
A1 Hydraulic kit (tank and pump)	A1ZZ	○	○	○	○
A2 Hydraulic kit (tank and 2 pumps)	A2ZZ	–	–	–	○
A1NT Hydraulic kit (pump only)	A1NT	○	○	○	○
A2NT Hydraulic kit (2 pumps only)	A2NT	–	–	–	○
LS Low noise version	LS00	○	○	○	○
Rubber anti-vibration mountings	KAVG	○	○	○	○
Antifreeze kit (only for A versions)	RAES	○	○	○	○
Refrigerant circuit pressure gauges	MAML	○	○	○	○
Electronic Soft starter	DSSE	○	○	○	○
Remote control panel	PCRL	○	○	○	○
Serial interface card RS485 with MODBUS protocol	INSE	○	○	○	○
Electronic thermostatic valve	VTEE	○	○	○	○

● Standard, ○ Optional, – Not available.

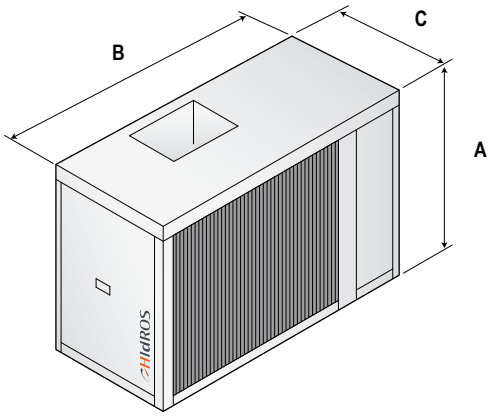

CZT 28 ÷ 52

Mod.	A (mm)	B (mm)	C (mm)	Kg
28/28A	1270	1900	880	329/436
42/42A	1571	2650	1145	343/491
52/52A	1571	2650	1145	375/530